Network Bullet

QNO-7082R

4MP IR Bullet Camera

Key Features

- Max. 4MP resolution, Up to 30fps
- Color : 0.1Lux (F1.6, 1/30sec), B/W : 0Lux (IR LED On)
- 3.2 ~ 10mm (3.1x) motorized varifocal
- IR viewable length: 30m (98.42ft)
- Day & Night (ICR), WDR (120dB)
- H.265, H.264, MJPEG, Multiple streaming supported
- Motion detection, Tampering, Defocus detection
- Hallway view (90°/270°), LDC support
- Micro SD/SDHC/SDXC memory slot (Max. 128GB)
- IP66, IK10

Compatible Accessories (Optional)

SBO-100B1

SBP-302PM

Design and specifications are subject to change without notice. The latest product information / specification can be found at hanwha-security.com

ⓒ Hanwha Techwin Co., Ltd. All rights reserved. 01-2022

QNO-7082R

4MP IR Bullet Camera

Specifications

Video

Imaging Device	1/3" CMOS
Resolution	2560x1440, 1920x1080, 1280x960, 1280x720, 800x600, 800x448, 720x576, 720x480, 640x480, 640x360, 320x240
Max. Framerate	H.265/H.264 : Max. 30fps at 4M all resolutions, MJPEG : Max. 15fps
Min. Illumination	Color : 0.1Lux (F1.6, 1/30sec) B/W : 0Lux (IR LED On)
Video Out	CVBS : 1.0 Vpp/75Ω composite, 720x480(N), 720x576(P) for installation

Lens

Focal Length (Zoom Ratio)	3.2~10mm (3.1x) motorized varifocal
Max. Aperture Ratio	F1.6(Wide) ~ F2.9(Tele)
Angular Field of View	H : 98.6(Wide) ~ 30.8(Tele), V : 52.3(Wide) ~ 17.3(Tele), D : 115.7(Wide) ~ 35.3(Tele)
Focus Control	Simple focus
Lens Type	DC auto iris

Operational

Camera Title	Displayed up to 85 characters
Day & Night	Auto(ICR)
Backlight Compensation	BLC, WDR, SSDR
Wide Dynamic Range	120dB
Digital Noise Reduction	SSNR
Motion Detection	4ea, polygonal zones
Privacy Masking	6ea, rectangular zones
Gain Control	Low / Middle / High
White Balance	ATW / AWC / Manual / Indoor / Outdoor
LDC	Support
Electronic Shutter Speed	Minimum/Maximum/Anti flicker (1/5~1/12,000sec)
Video Rotation	Flip, Mirror, Hallway view(90°/270°)
Analytics	Defocus detection, Directional detection, Motion detection, Enter/Exit, Tampering, Virtual line
Alarm I/O	Input 1ea / Output 1ea
Alarm Triggers	Analytics, Network disconnect, Alarm input
Alarm Events	File upload via FTP and e-mail, Notification via e-mail, SD/SDHC/SDXC or NAS recording at event triggers, Alarm output, Handover
Audio In	Line in
IR Viewable Length	30m(98.42ft)

Network

Ethernet	RJ-45 (10/100BASE-T)
Video Compression	H.265/H.264 : Main/High, MJPEG
Audio Compression	G.711 u-law / G.726 Selectable G.726(ADPCM) 8KHz, G.711 8KHz, G.726 16Kbps, 24Kbps, 32Kbps, 40Kbps

Design and specifications are subject to change without notice. The latest product information / specification can be found at hanwha-security.com

ⓒ Hanwha Techwin Co., Ltd. All rights reserved. **01-2022**

Smart Codec	Manual (5ea area), WiseStream II
Bitrate Control	H.264/H.265 : CBR or VBR MJPEG : VBR
Streaming	Unicast (6 users) / Multicast Multiple streaming (Up to 3 profiles)
Protocol	IPv4, IPv6, TCP/IP, UDP/IP, RTP(UDP), RTP(TCP), RTCP, RTSP, NTP, HTTP, HTTPS, SSL/TLS, DHCP, PPPoE, FTP, SMTP, ICMP, IGMP, SNMPv1/v2c/v3(MIB-2), ARP, DNS, DDNS, QoS, PIM-SM, UPnP, Bonjour, LLDP
Security	HTTPS(SSL) Login Authentication Digest Login Authentication IP Address Filtering User access Log 802.1X Authentication
Application Programming Interface	ONVIF Profile S/G/T, SUNAPI (HTTP API)

General

Webpage Language	English, Korean, Chinese, French, Italian, Spanish, German, Japanese, Russian, Portuguese, Czech, Polish, Turkish, Dutch, Hungarian, Greek
Edge Storage	Micro SD/SDHC/SDXC 1slot 128GB
Memory	512MB RAM, 256MB Flash

Environmental & Electrical

Operating Temperature / Humidity	-40°C~+55°C (-40°F~+131°F) / Less than 95% RH ∗Start up should be done at -30°C or above
Storage Temperature / Humidity	-40°C~+60°C (-40°F~+140°F) / Less than 95% RH
Certification	IP66, IK10
Input Voltage	PoE(IEEE802.3af, Class3), 12VDC
Power Consumption	PoE: Max 11.4W, typical 8W 12VDC: Max 9.6W, typical 7W

Mechanical

Color / Material	Dark grey / Aluminum
Product Dimensions / Weight	Ø78.0 x 259.8mm (Ø3.07 x 10.23"), 900g (1.984 lb)
Compatible Conduit hole / Gangbox	3/4"(M25) Single, Double, 4"Octagon
Backbox	SBO-100B1, SBO-147B

DORI (EN62676-4 standard)

Detect (25PPM/ 8PPF)	Wide: 27m(89.86ft) / Tele: 129m(422.61ft)
Observe (63PPM/ 19PPF)	Wide: 11m(35.95ft) / Tele: 52m(169.04ft)
Recognize (125PPM/ 38PPF)	Wide: 6m(17.97ft) / Tele: 26m(84.52ft)
Identify (250PPM/ 76PPF)	Wide: 3m(8.99ft) / Tele: 13m(42.26ft)

Design and specifications are subject to change without notice. The latest product information / specification can be found at hanwha-security.com
ⓒ Hanwha Techwin Co., Ltd. All rights reserved. 01-2022

QNO-7082R

4MP IR Bullet Camera

CAD

Unit: mm [inch]

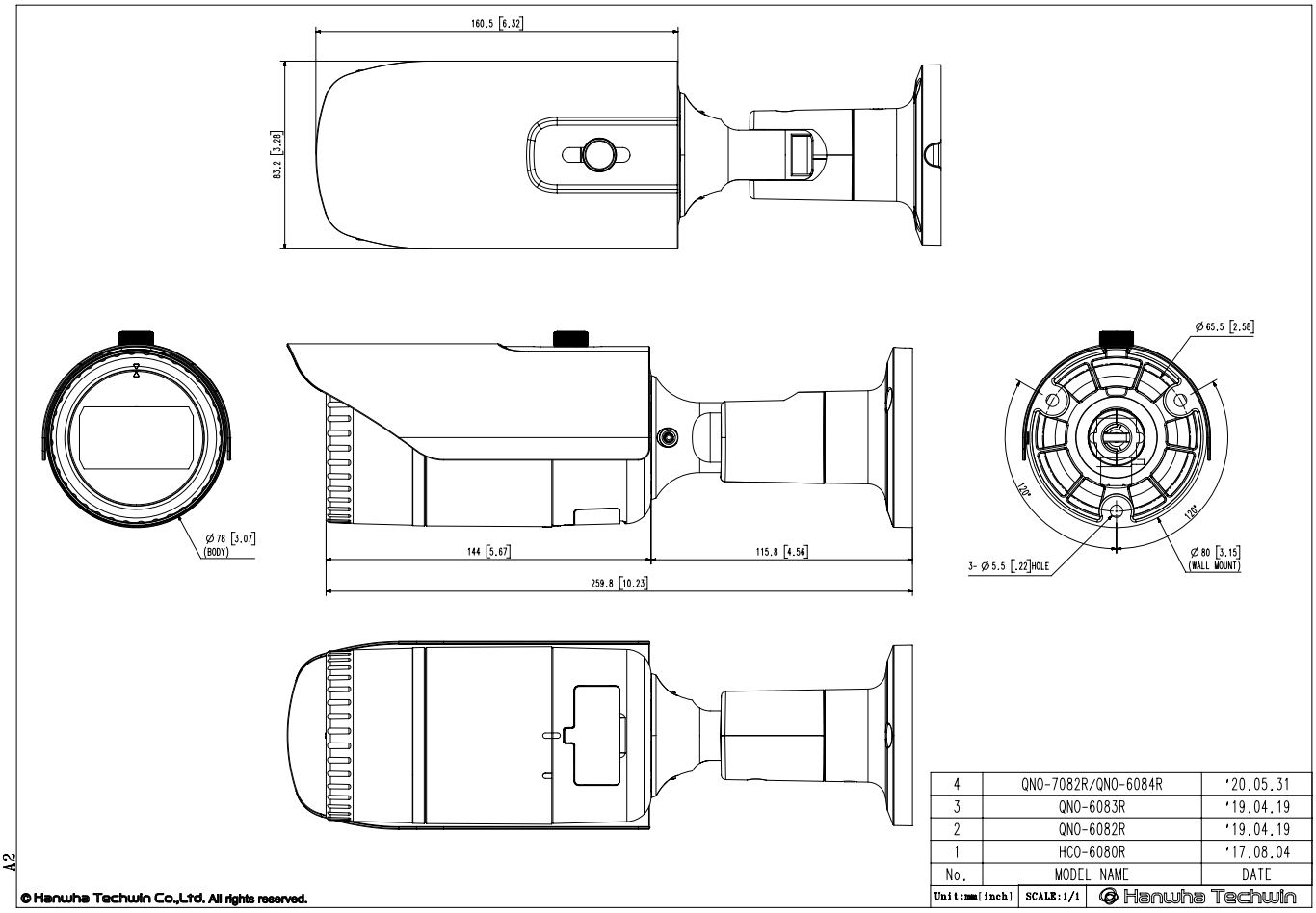

No.	MODEL NAME	DATE
4	QNO-7082R/QNO-6084R	'20.05.31
3	QNO-6083R	'19.04.19
2	QNO-6082R	'19.04.19
1	HCO-6080R	'17.08.04

Unit:mm[inch] | SCALE:1/1 | Hanwha Techwin

© Hanwha Techwin Co.,Ltd. All rights reserved.

QNO-7082R

4MP IR Bullet Camera

CAD

Unit: mm [inch]

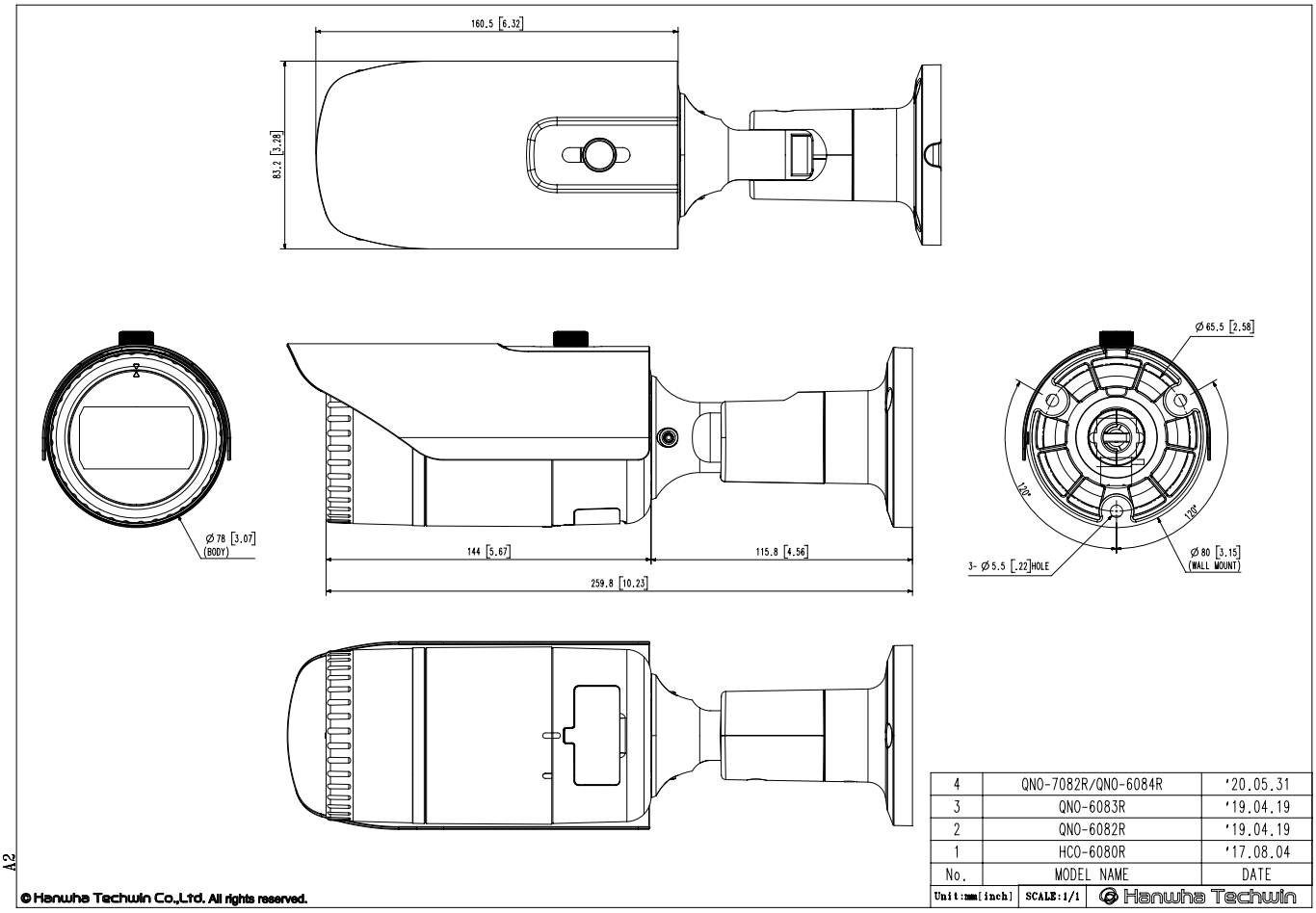

No.	MODEL NAME	DATE
4	QNO-7082R/QNO-6084R	'20.05.31
3	QNO-6083R	'19.04.19
2	QNO-6082R	'19.04.19
1	HCO-6080R	'17.08.04

Unit:mm[inch] | SCALE:1/1 | Hanwha Techwin

© Hanwha Techwin Co.,Ltd. All rights reserved.